Produits Neptune

TAO3672

Bathtub

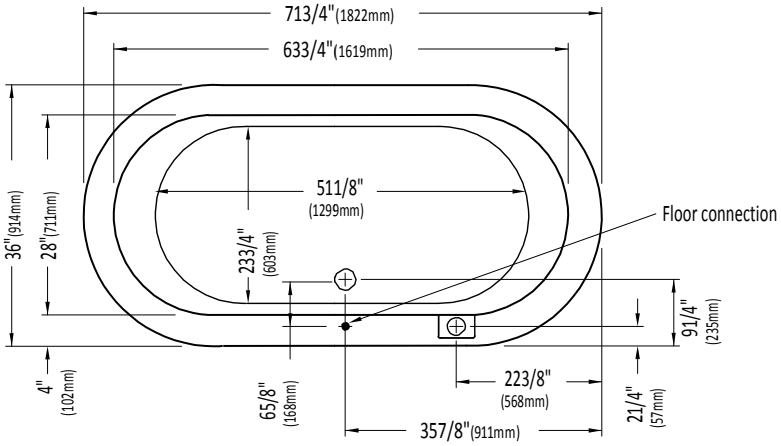

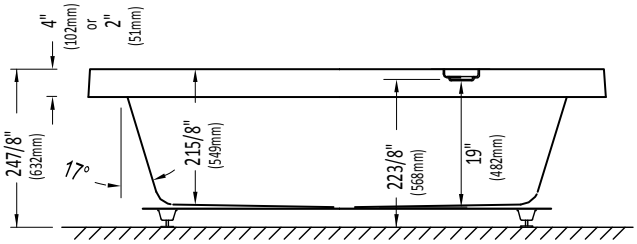

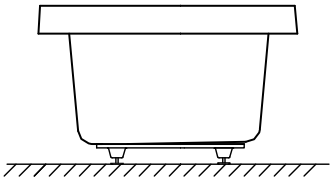

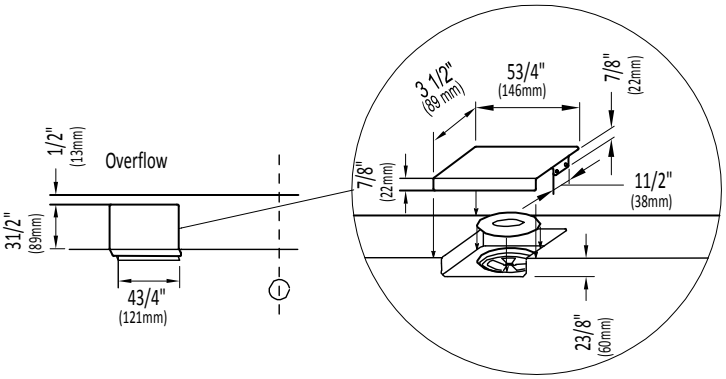

* A bathtub fitted with back jets can cause the pump to protrude by approximately 3" from the overall dimension.

** All dimensions are approximate and subject to change without notice. Please refer to the installation guide before beginning the installation